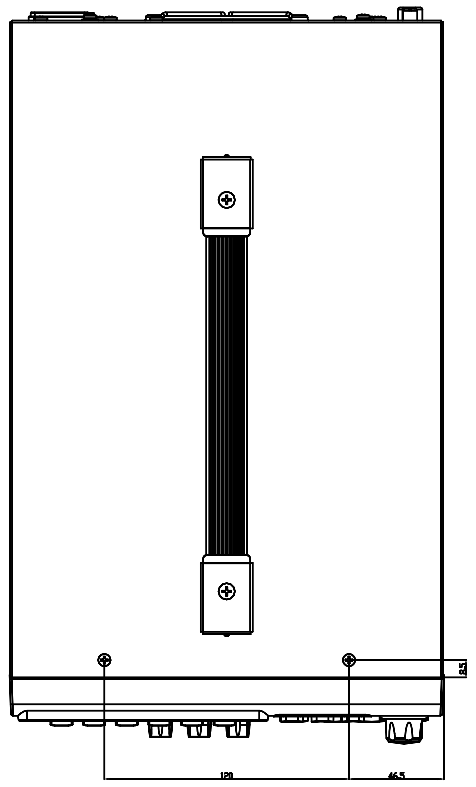
8.5
120
46.5

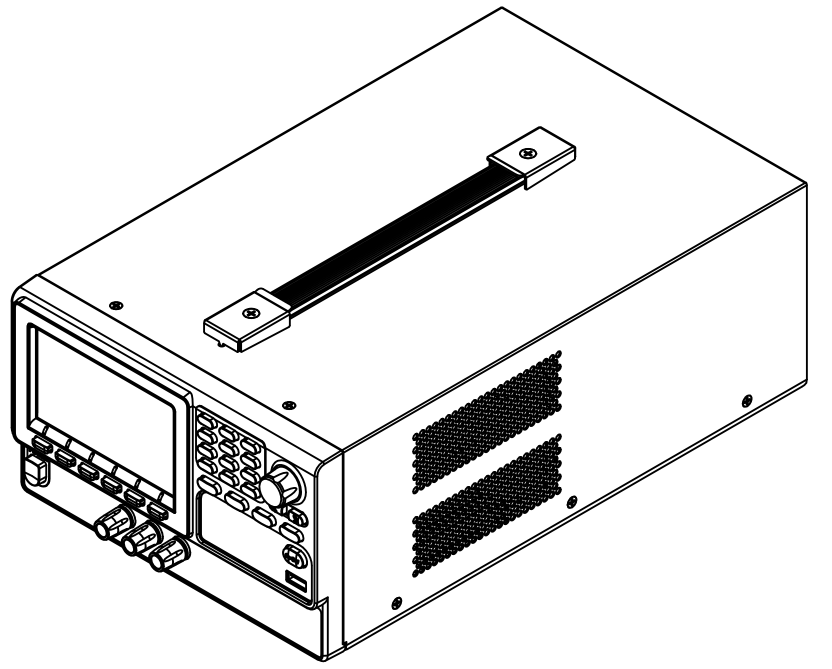

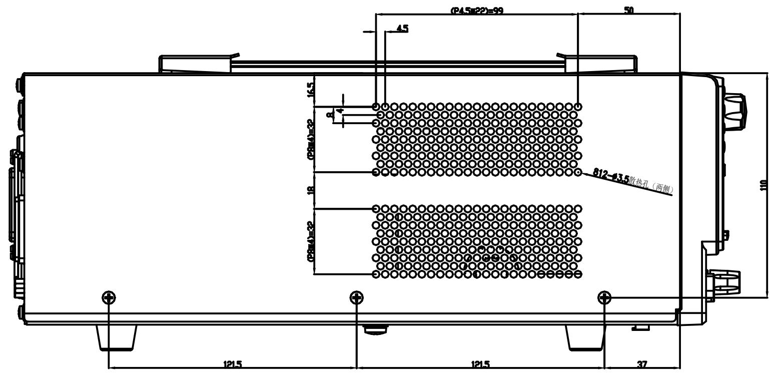
(P4.5x22)=99
50
4.5
16.5
4
8
(P8x4)=32
18
(P8x4)=32
812-Ø3.5散热孔（两侧）
110
121.5
121.5
37

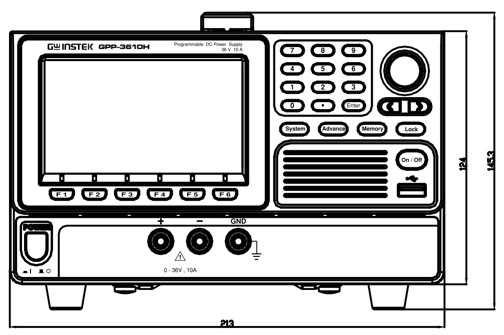
GW INSTEK GPP-3610H
Programmable DC Power Supply
36 V 10 A
7
8
9
4
5
6
1
2
3
0
•
Enter
System
Advance
Memory
Lock
On / Off
F 1
F 2
F 3
F 4
F 5
F 6
POWER
+
−
GND
0 - 36V , 10A
124
145.3
213

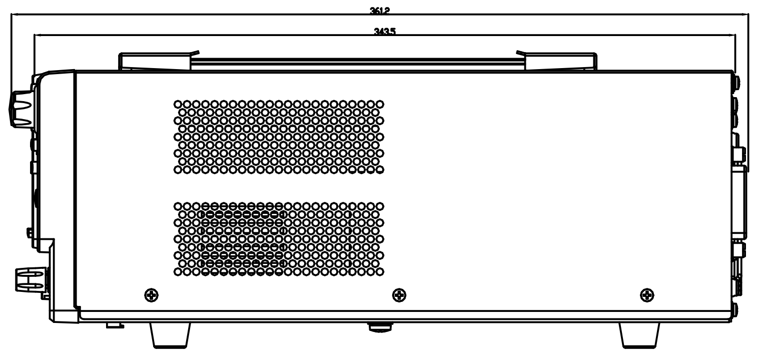
361.2
343.5

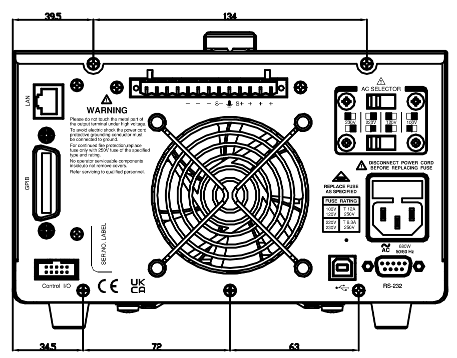
39.5
134
LAN
WARNING
Please do not touch the metal part of the output terminal under high voltage.
To avoid electric shock the power cord protective grounding conductor must be connected to ground.
For continued fire protection,replace fuse only with 250V fuse of the specified type and rating.
No operator serviceable components inside,do not remove covers.
Refer servicing to qualified personnel.
− − − S− ⏚ S+ + + +
AC SELECTOR
230V
220V
120V
100V
DISCONNECT POWER CORD BEFORE REPLACING FUSE
REPLACE FUSE AS SPECIFIED
FUSE RATING
100V 120V T 12A 250V
220V 230V T 6.3A 250V
GPIB
SER.NO. LABEL
Control I/O
CE
UK CA
AC 680W 50/60 Hz
RS-232
34.5
72
63

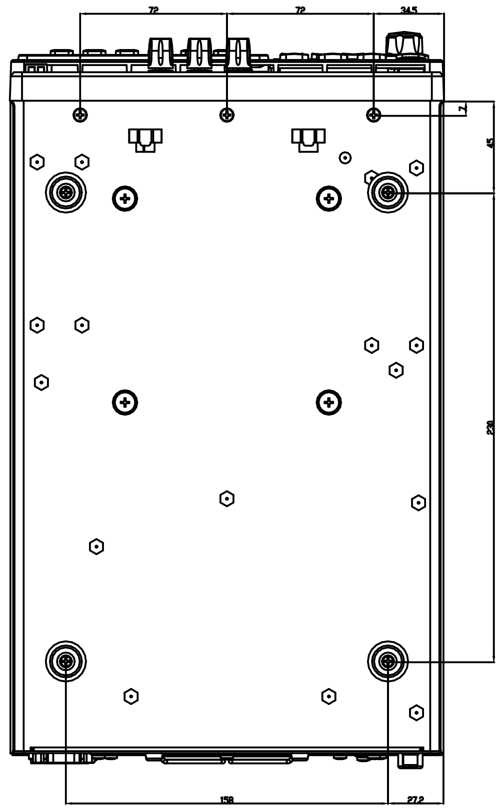
72
72
34.5
7
45
230
158
27.2

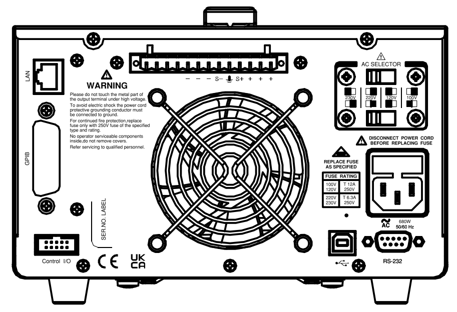
LAN
WARNING
Please do not touch the metal part of the output terminal under high voltage.
To avoid electric shock the power cord protective grounding conductor must be connected to ground.
For continued fire protection,replace fuse only with 250V fuse of the specified type and rating.
No operator serviceable components inside,do not remove covers.
Refer servicing to qualified personnel.
− − − S− ⏚ S+ + + +
AC SELECTOR
230V
220V
120V
100V
DISCONNECT POWER CORD BEFORE REPLACING FUSE
REPLACE FUSE AS SPECIFIED
FUSE RATING
100V 120V T 12A 250V
220V 230V T 6.3A 250V
GPIB
SER.NO. LABEL
Control I/O
CE
UK CA
AC 680W 50/60 Hz
RS-232

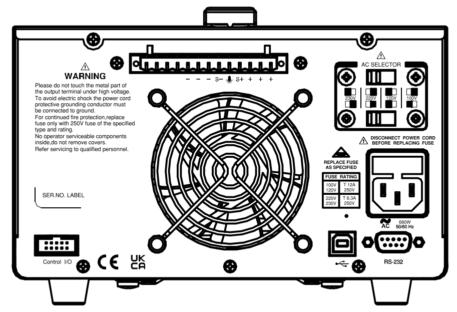
WARNING
Please do not touch the metal part of the output terminal under high voltage.
To avoid electric shock the power cord protective grounding conductor must be connected to ground.
For continued fire protection,replace fuse only with 250V fuse of the specified type and rating.
No operator serviceable components inside,do not remove covers.
Refer servicing to qualified personnel.
− − − S− ⏚ S+ + + +
AC SELECTOR
230V
220V
120V
100V
DISCONNECT POWER CORD BEFORE REPLACING FUSE
REPLACE FUSE AS SPECIFIED
FUSE RATING
100V 120V T 12A 250V
220V 230V T 6.3A 250V
SER.NO. LABEL
Control I/O
CE
UK CA
AC 680W 50/60 Hz
RS-232

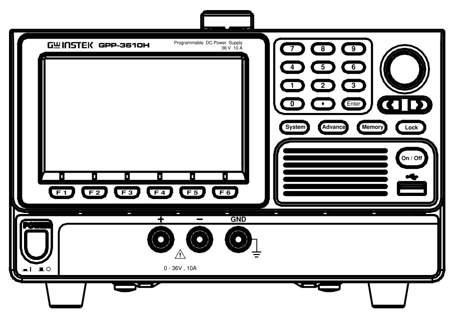
GW INSTEK GPP-3610H
Programmable DC Power Supply
36 V 10 A
System
Advance
Memory
Lock
On / Off
F 1
F 2
F 3
F 4
F 5
F 6
+
−
GND
0 - 36V , 10A

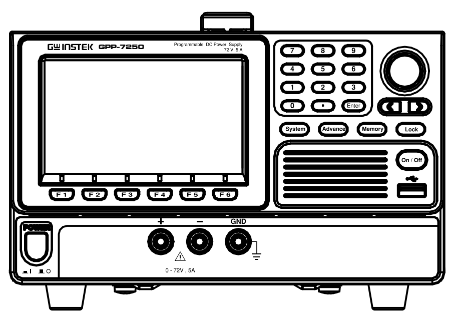
GW INSTEK GPP-7250
Programmable DC Power Supply
72 V 5 A
System
Advance
Memory
Lock
On / Off
F 1
F 2
F 3
F 4
F 5
F 6
+
−
GND
0 - 72V , 5A